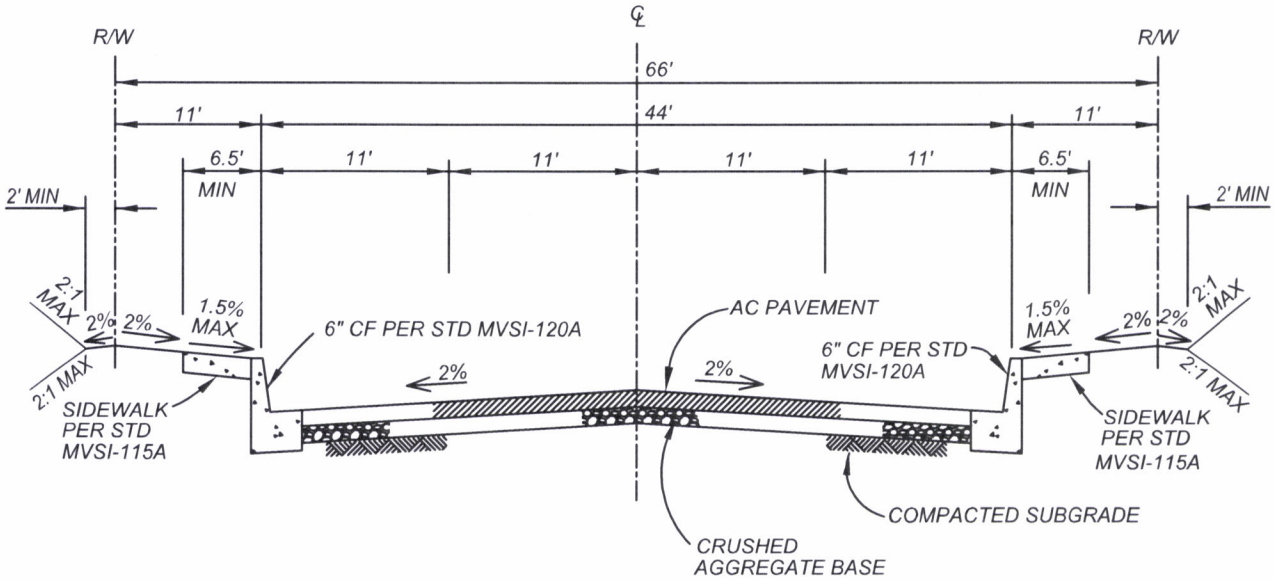

TYPICAL SECTION

NOTES:

1.) THICKNESS OF PAVEMENT SECTION TO BE DETERMINED BY R VALUE TESTING PER CALTRANS DESIGN METHOD TEST 301 WITH RECOMMENDED SAFETY FACTOR, MINIMUM 0.50' AC / 1.00' CAB. AC SHALL BE PLACED IN LIFTS, AND THICKNESS OF EACH LIFT SHALL NOT EXCEED 3".

2.) MINIMUM TI = 10.

3.) HALF WIDTH STREETS SHALL BE CONSTRUCTED TO A WIDTH OF 1/2 STREET WIDTH PLUS 12'.

NOT TO SCALE

CITY OF MORENO VALLEY — DECEMBER 3, 1984	RECOMMENDED: PRINCIPAL ENGINEER / DATE 10/31/13	CITY OF MORENO VALLEY PUBLIC WORKS DEPARTMENT - TRANSPORTATION ENGINEERING DIVISION
	APPROVED: PUBLIC WORKS DIRECTOR / CITY ENGINEER / DATE 10/31/13	**NEIGHBORHOOD COLLECTOR** — STANDARD PLAN **MVSI-106C-0** — SHEET 3 OF 3